AS Type: Suspension-style Electric Wire Rope Hoist

- Suspension Electric Wire Rope Hoist is suitable for fixed vertical hoisting of heavy objects, especially effective for cargo elevators.
- Economical, easy to install, low failure rate.
- Direct electromagnetic brake features high braking force and is easy to adjust.
- Planetary deceleration gears are made of heat-treated medium carbon steel.
- Outside drum diameter is 16x cable diameter.
- Hook block is made of cast and machined steel.

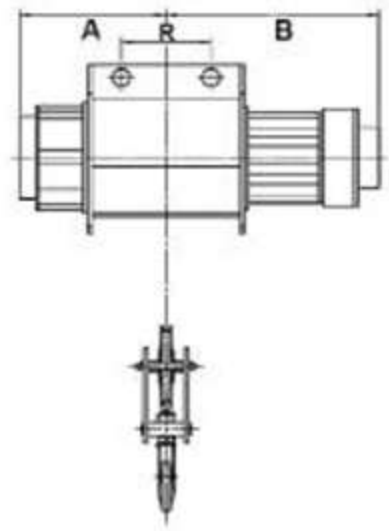

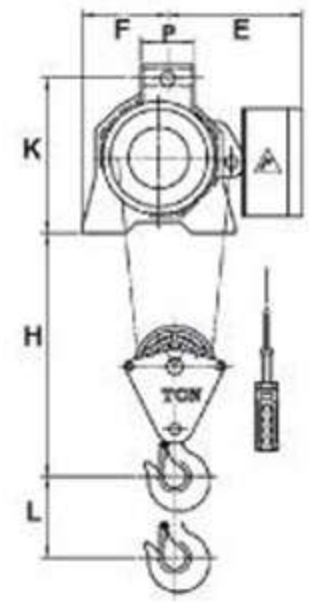

Suspension Electric Wire Rope Hoist- Specifications / Dimensions(mm)

Loading TONS	Model	Lifting Height (M)	Hoisting Trolley Speed 60Hz	Hoisting Trolley Speed 50Hz	Hoisting Motor (kw)	Wire Rope Diameter (mm)	Wire Rope Reeving (mm)	Approximate Size (m/m) A	Approximate Size (m/m) B	Approximate Size (m/m) E	Approximate Size (m/m) F	Approximate Size (m/m) H	Approximate Size (m/m) K	Approximate Size (m/m) P	Approximate Size (m/m) R
1	AS011	5.26	7.2	6	1.5	8	1/2	649		344	220	510	354	126	170
		11.10						849							190
2	AS021	5.55	3.6	3	1.5	8	1/4	849		344	220	570	354	126	190
		8.79						1049							
		12.03						1249							
	AS022	5.17	7.2	6	3	8	2/4	—							
		9.05						1214		376	238	570	430	—	210
		12.20						1384							
	AS023	10.03	7.2	6	3	10	1/2	—		344	238	—	430	150	210
		16.71													
		22.12													
3	AS031	5.01	3.6	3	3	10	1/4	—		376	238	—	430	150	210
		8.36													
		11.06													
	AS032	4.20	7.2	6	4.5	10	2/4	—							
		7.54													
		10.24						1384		376	238	621	434	210	210
	AS033	7.76	7.2	6	4.5	12	1/2	—		376	238	—		150	210
		13.17													
		24.64						1659				1084			
5	AS051	5.24	3.2	2.7	4.5	12	1/4	1027		449	278	740	508	160	250
		8.71						—							
		12.26						1477							
	AS052	4.24	6.4	5.3	7.5	12	2/4	1052		449	278	—	508	160	250
		7.71						—		449					
	AS053	7.85	6.4	5.3	7.5	16	1/2	—							
		15.09						1272		449	278	900	550	—	250
		19.20						—							
7.5	AS071	6.09	3.2	2.7	5.62	14	1/4	—		449	288	—	—	170	250
		9.11													
		12.34													
	AS072	5.03	4.8	4	9	14	2/4	—		449	288	1400		170	250
		8.06													
		11.29						1650							
10	AS101	6.55	2.9	2.4	7.5	16	1/4	1293		496	343	972	628	222	400
		9.84						—							
		13.36													
	AS102	5.02	4.8	4	11.3	16	2/4	—		496	343	—	628	222	400
		8.32													
		11.83													